Date	Changes	REV
2026.10.22	Original	1.0

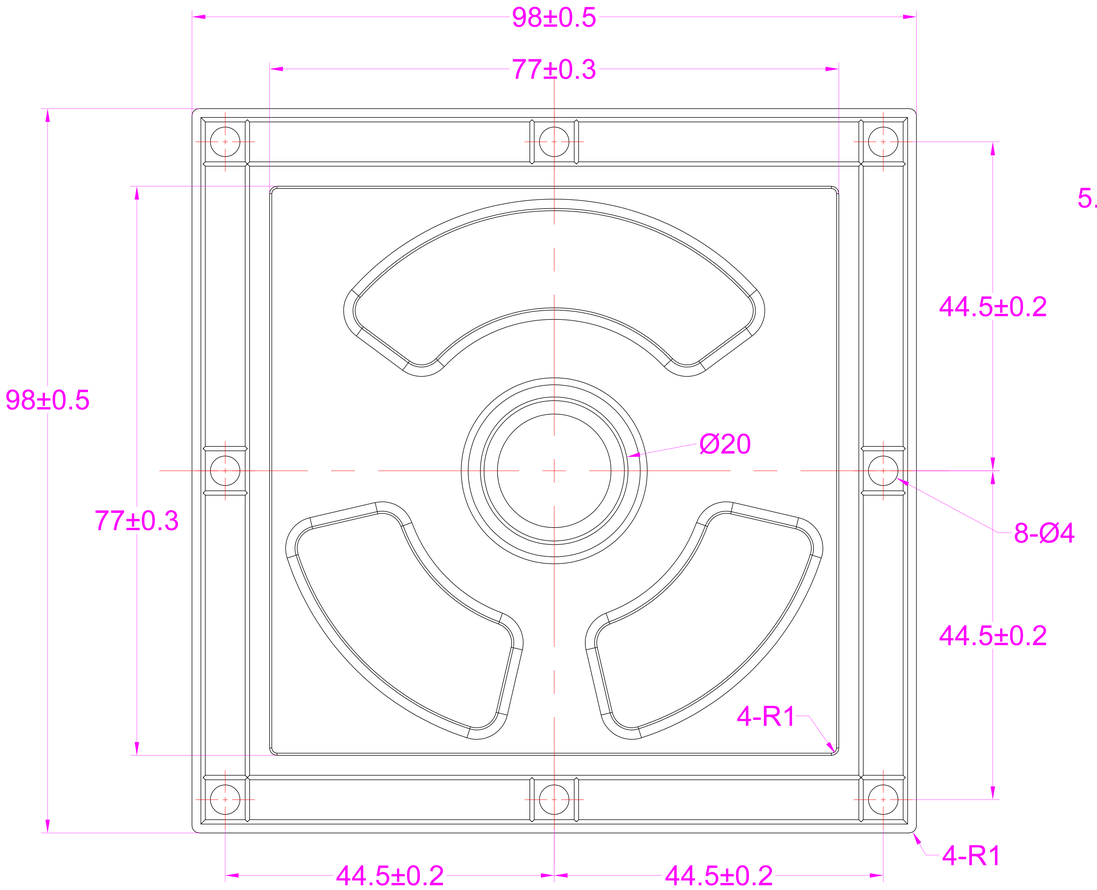

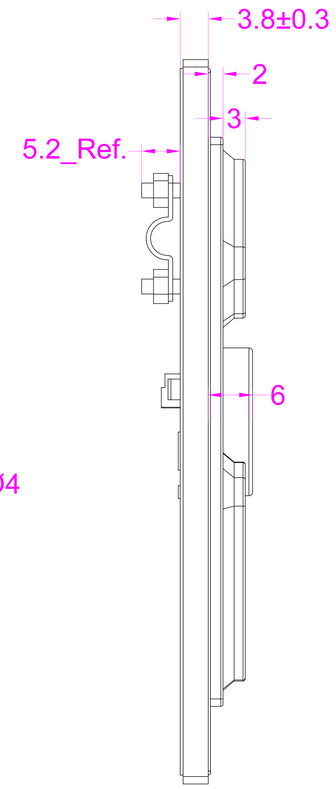

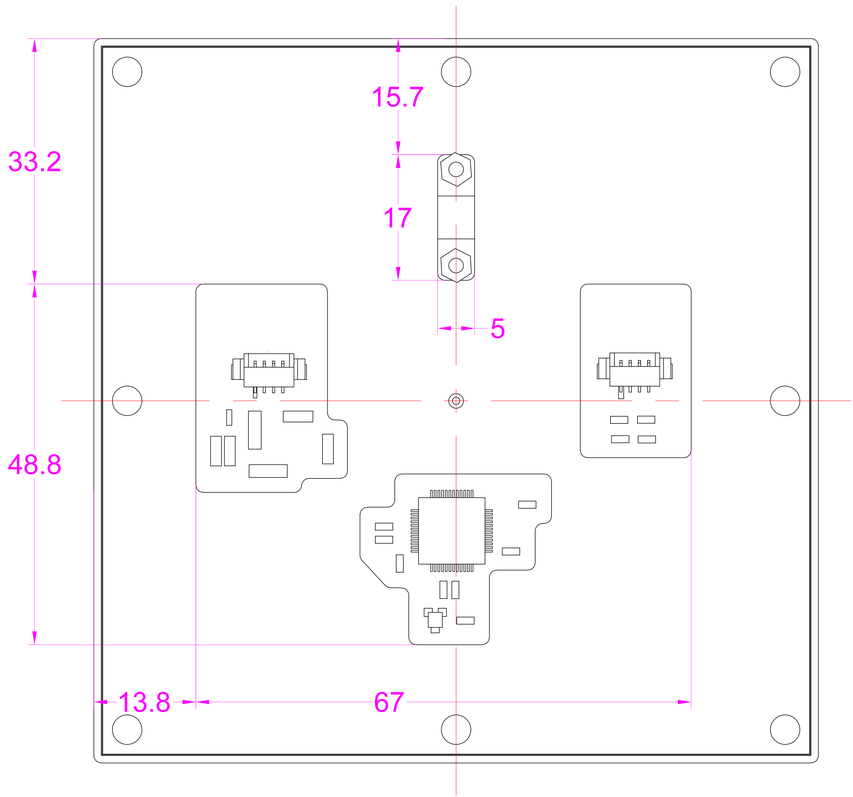

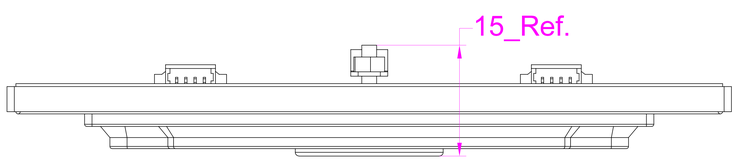

KEY TECHNOLOGY CHINA LIMITED

深圳市键特电子有限公司

www.rugged-key.com www.rugged-key.cn

Part Name				Project Name			
Part No.	K-TEK-M77-DHP-ML			Project No.			
Material				Scale	1:1	Unit	mm
Date	2026.10.22	Version	1.0	Tolerance		Sheet	1 of 1
Designed	Luo Chuanjian	Audited		Tony Deng		Approved	