Date	Changes	REV
2020.04.09	Original	1.0

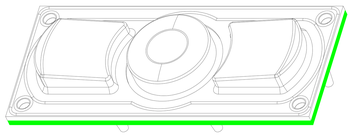

比例 0.5

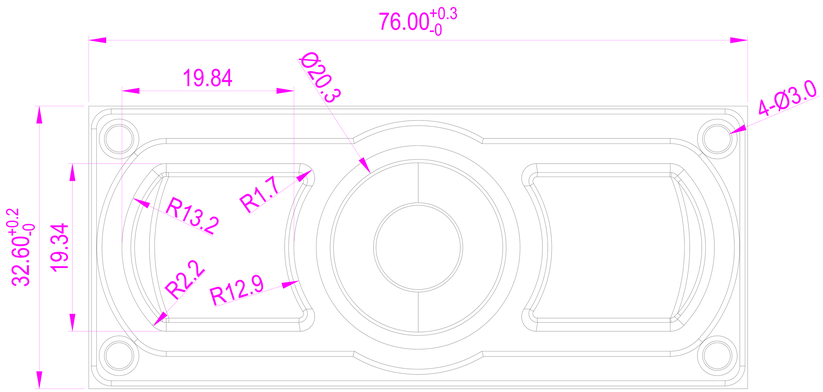

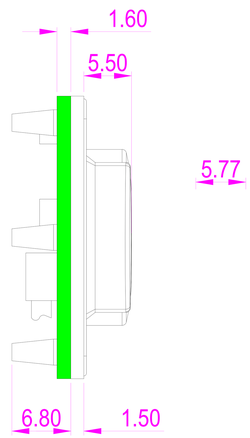

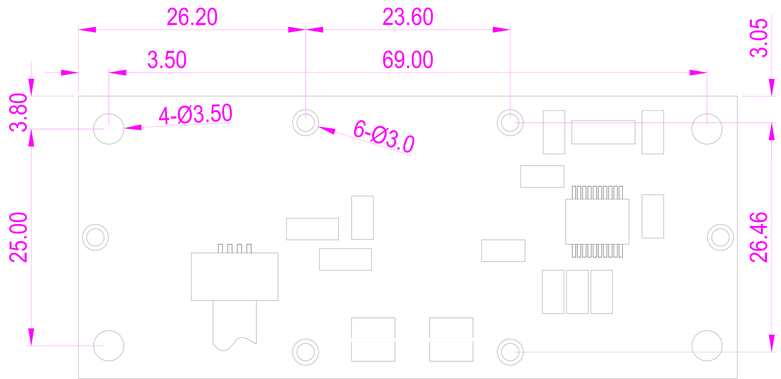

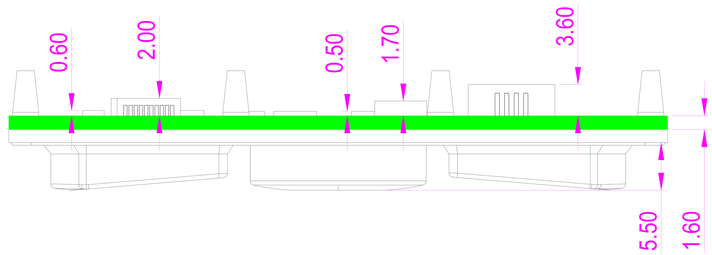

KEY TECHNOLOGY(CHINA)LIMITED

深圳市键特电子有限公司

www.key-tek.cn www.ikb-mkb.com

Part Name				Project Name	M76HP-2		
Part No.				Project No.			
Material				Scale	1:1	Unit	mm
Date	2020.04.09	Version	1.0	Tolerance	IT12	Sheet	1 of 1
Designed	MIKE	Audited		Tony Deng	Approved		