Date	Changes	REV
2023.7.13	Original	1.0

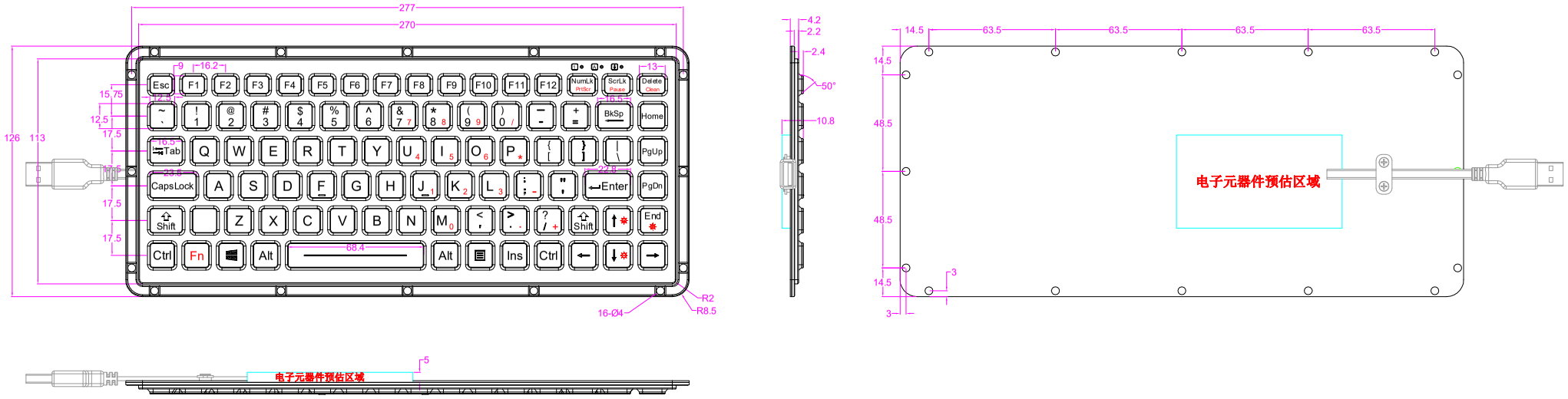

KEY TECHNOLOGY(CHINA)LIMITED

深圳市键特电子有限公司

www.rugged-key.com www.rugged-key.cn

Part Name				Project Name	K-TEK-M270-FN-BL-NV-151B		
Part No.				Project No.			
Material				Scale	1:1	Unit	mm
Date	2023.7.13	Version	1.0	Tolerance	IT12	Sheet	1 of 1
Designed	liaoxiangbo	Audited	Tony Deng	Approved			