Date	Changes	REV
2024.10.22	Original	1.0

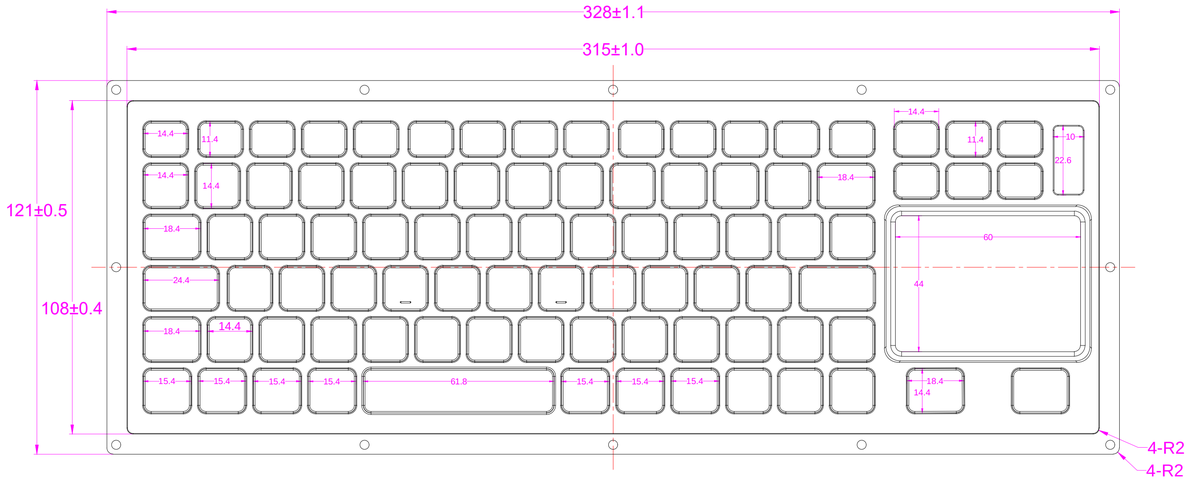

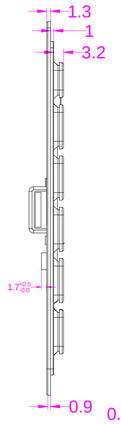

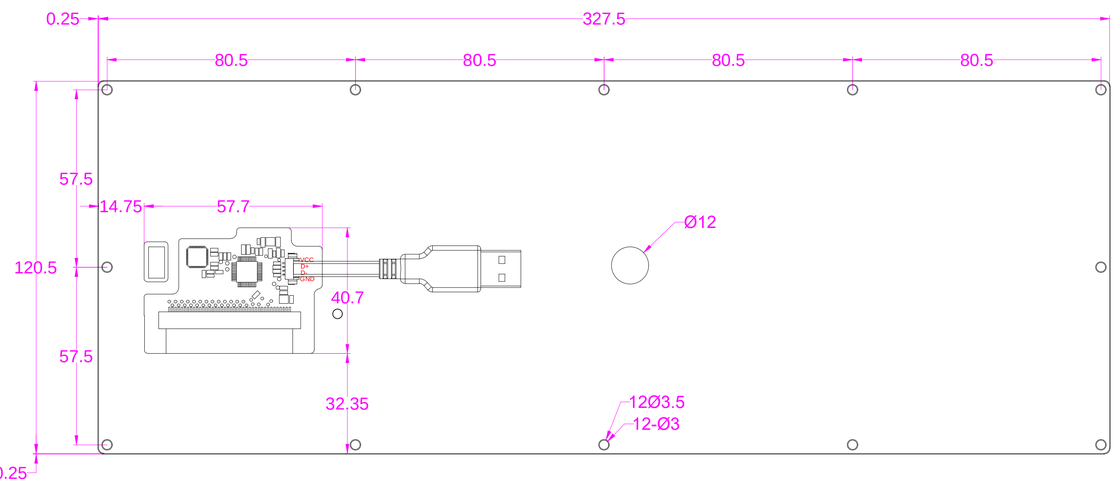

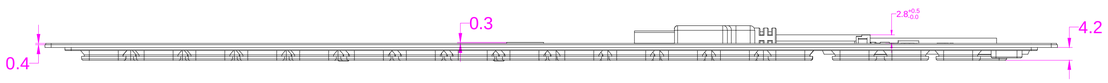

KEY TECHNOLOGY(CHINA)LIMITED

深圳市键特电子有限公司

www.rugged-key.com www.rugged-key.cn

Part Name				Project Name	K-TEK-M315TP-FN-BL-FC-KC-ML		
Part No.				Project No.			
Material				Scale	1:1	Unit	mm
Date	2024.10.22	Version	1.0	Tolerance	IT12	Sheet	1 of 1
Designed	yangguifeng	Audited		Tony Deng	Approved		